Please check the examination details below before entering your candidate information

Candidate surname	Other names

Centre Number | Candidate Number

Pearson Edexcel Level 1/Level 2 GCSE (9–1)

Tuesday 18 June 2024

Morning (Time: 1 hour 45 minutes)

Paper reference **1DT0/1E**

Design and Technology

COMPONENT 1: Textiles

You must have:
Calculator, ruler, HB pencil, protractor, pair of compasses

Total Marks

Instructions

- Use **black** ink or ball-point pen.
- **Fill in the boxes** at the top of this page with your name, centre number and candidate number.
- Answer **all** questions.
- Answer the questions in the spaces provided – *there may be more space than you need.*
- Calculators may be used.
- Any diagrams may NOT be accurately drawn, unless otherwise indicated.
- You must **show all your working out** with **your answer clearly identified** at the **end of your solution**.

Information

- The total mark for this paper is 100.
- The marks for **each** question are shown in brackets – *use this as a guide as to how much time to spend on each question.*

Advice

- Read each question carefully before you start to answer it.
- Try to answer every question.
- Check your answers if you have time at the end.

Turn over

©2024 Pearson Education Ltd.
F:1/1/1/1/1/1/1

P 7 4 0 5 1 A 0 1 2 8

Pearson

SECTION A

Core

Answer ALL questions. Write your answers in the spaces provided.

1 (a) The materials that products are made from are chosen because of their properties.

Figure 1 shows a table of products.

For each of the products shown, give a property of the material it is made from that makes the material suitable for the product.

The first one has been done for you.

Picture of product	Material and product	Property
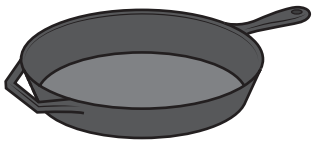	Cast iron frying pan	Hard
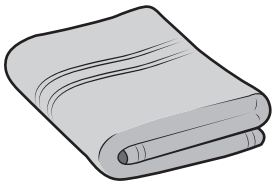	Cotton bath towel	**(1)** (i) .....
	Polyester resin earrings	**(1)** (ii) .....
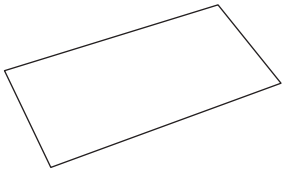	Copier paper	**(1)** (iii) .....
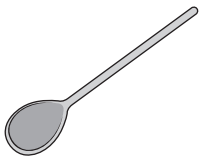	Beech cooking spoon	**(1)** (iv) .....

Figure 1

DO NOT WRITE IN THIS AREA
DO NOT WRITE IN THIS AREA
DO NOT WRITE IN THIS AREA

(b) (i) The frying pan is made from cast iron. Cast iron is hard, therefore it does not scratch easily.

Explain **one other** advantage of using cast iron for the frying pan.

(2)

.....

.....

.....

.....

(ii) Cast iron contains 2% carbon.

The cast iron frying pan weighs 3 kg.

Calculate how many grams of carbon are in the cast iron frying pan.

(2)

Answer ..... grams

(Total for Question 1 = 8 marks)

DO NOT WRITE IN THIS AREA
DO NOT WRITE IN THIS AREA
DO NOT WRITE IN THIS AREA

2 Figure 2 shows a wooden sheep that is being threaded with a yarn.

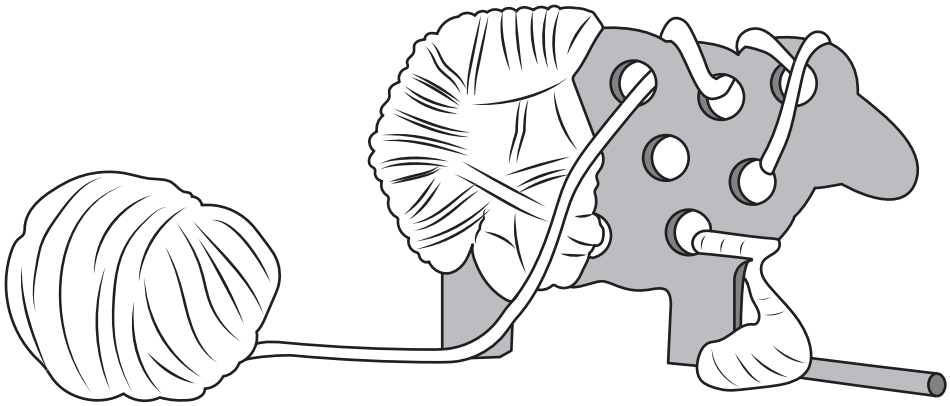

Figure 2

(a) Name **one** specific animal fibre that can be used to make the yarn being threaded in Figure 2.

(1)

.....

The wood that is used to manufacture the sheep is delivered to the manufacturer using vehicles powered by biofuels.

(b) Explain **one** advantage of using biofuels to power the delivery vehicles.

(2)

.....

.....

.....

.....

(c) Explain **one** advantage of using computer-aided design (CAD) when producing the design ideas for the wooden sheep.

(2)

.....

.....

.....

.....

DO NOT WRITE IN THIS AREA
DO NOT WRITE IN THIS AREA
DO NOT WRITE IN THIS AREA

A new animal shape needs to be designed.

The designer has collected some data about the popularity of specific animals amongst young children.

Figure 3 is a table of data showing the popularity of specific animals amongst young children.

Animal	Number of votes	Percentage of votes (%)
Cat	165	55
Dog	75	25
Rabbit	.....	15
Mouse	.....	5
Total	300	100

Figure 3

(d) (i) Complete Figure 3 above by calculating the **two** missing values.

(2)

Space for working

Number of votes for Rabbit .....

Number of votes for Mouse .....

DO NOT WRITE IN THIS AREA
DO NOT WRITE IN THIS AREA
DO NOT WRITE IN THIS AREA

Figure 4 is a partly completed bar chart that shows the percentage of votes received for the Cat and the Dog.

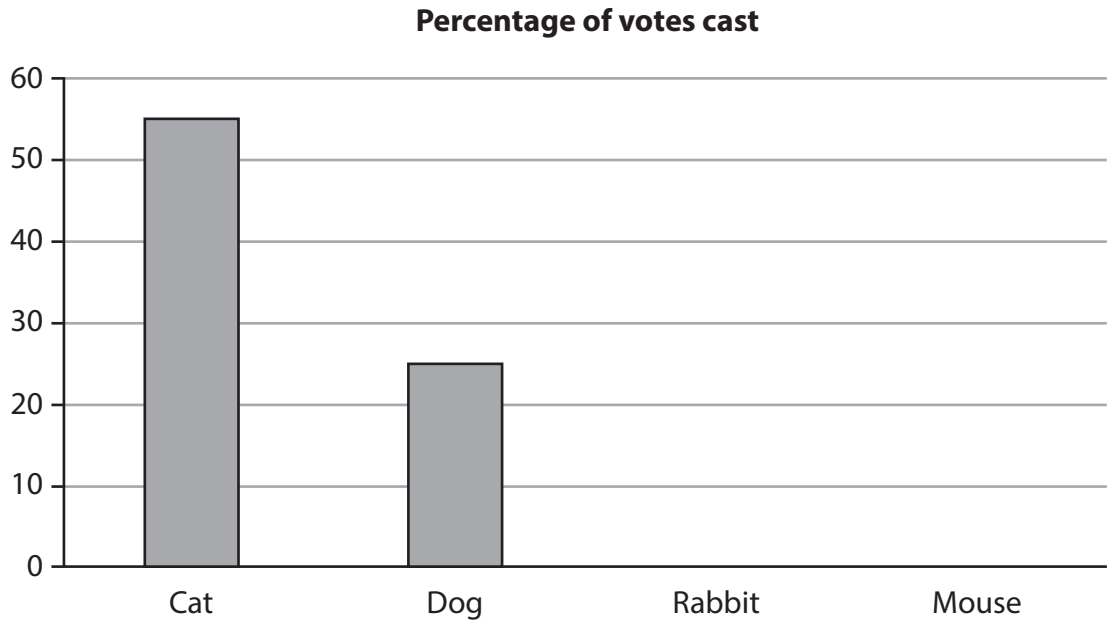

Figure 4

(ii) Complete the bar chart shown in Figure 4 to show the percentage of votes received for the Rabbit and the Mouse.

(2)

(Total for Question 2 = 9 marks)

DO NOT WRITE IN THIS AREA
DO NOT WRITE IN THIS AREA
DO NOT WRITE IN THIS AREA

DO NOT WRITE IN THIS AREA
DO NOT WRITE IN THIS AREA
DO NOT WRITE IN THIS AREA

3 Figure 5 shows a pulley and pulley belt, a motor, and the cross section of the pulley belt used in a model boat drive system.

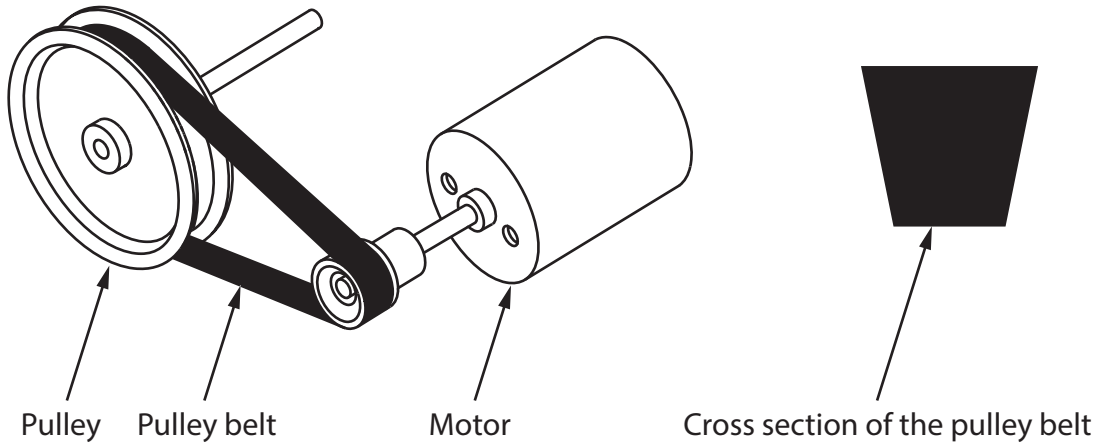

Figure 5

(a) Name the type of pulley belt shown in the cross section in Figure 5.

(1)

.....

(b) Explain **one** reason for manufacturing the pulley from aluminium rather than mild steel.

(2)

.....

.....

.....

.....

Figure 6 shows the pulley system for the model boat drive system.

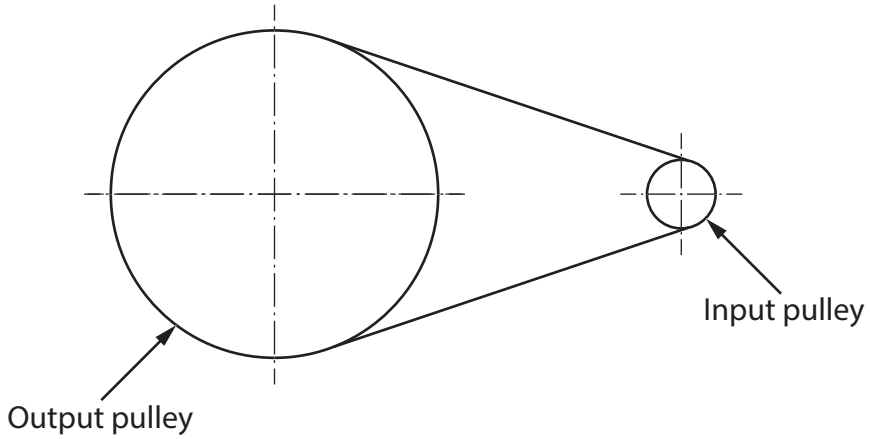

Figure 6

(c) The pulley system has a velocity ratio of 5:1.

The input speed is 2000 revolutions per minute (rpm).

Calculate the output speed of the pulley system.

Use the formula below to calculate the answer.

$$\text{Velocity ratio} = \frac{\text{input speed}}{\text{output speed}}$$

Give your answer in rpm.

(2)

Answer ..... rpm

DO NOT WRITE IN THIS AREA
DO NOT WRITE IN THIS AREA
DO NOT WRITE IN THIS AREA

The motor for the model boat is powered by the solar cell shown in Figure 7.

The solar cell is 5 cm by 5 cm.

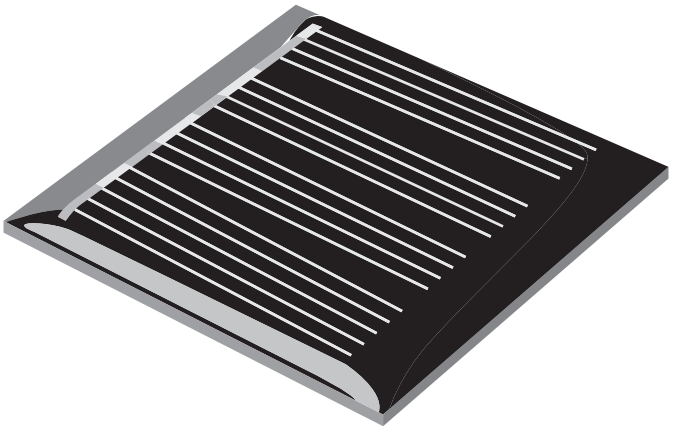

Figure 7

(d) Explain **one** disadvantage of using the solar cell to power the motor for the model boat.

(2)

.....

.....

.....

.....

DO NOT WRITE IN THIS AREA
DO NOT WRITE IN THIS AREA
DO NOT WRITE IN THIS AREA

Figure 8 shows the frame for the model boat.

The model boat has been manufactured from balsa wood.

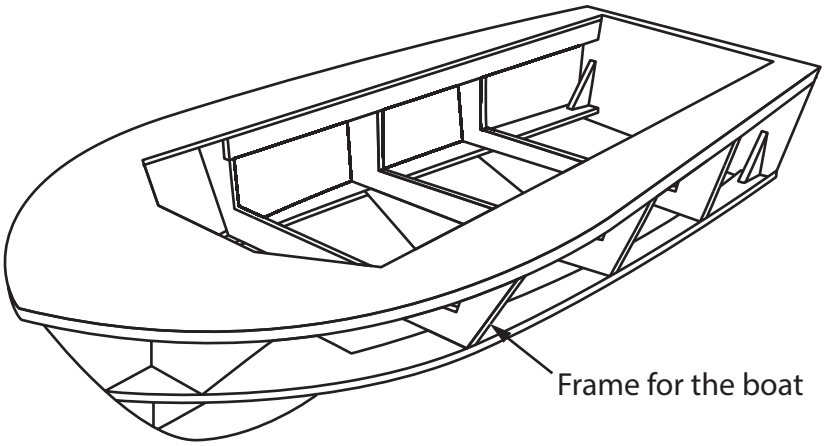

Figure 8

(e) Explain **two** benefits of using balsa wood for the frame of the model boat.

(4)

1 .....

.....

.....

.....

2 .....

.....

.....

.....

(Total for Question 3 = 11 marks)

DO NOT WRITE IN THIS AREA
DO NOT WRITE IN THIS AREA
DO NOT WRITE IN THIS AREA

4 (a) Explain **two** ways that conductive inks can be used in products.

(4)

1 .....

.....

.....

.....

2 .....

.....

.....

.....

(b) A small batch of conductive ink weighs 9 grams.

The ink contains 40% of hazardous material by weight.

Calculate the weight of hazardous material present in the ink in grams.

(2)

Answer ..... grams

DO NOT WRITE IN THIS AREA
DO NOT WRITE IN THIS AREA
DO NOT WRITE IN THIS AREA

(c) Discuss how designers can minimise the environmental impact of materials when developing new and emerging technologies.

(6)

DO NOT WRITE IN THIS AREA
DO NOT WRITE IN THIS AREA
DO NOT WRITE IN THIS AREA

DO NOT WRITE IN THIS AREA
DO NOT WRITE IN THIS AREA
DO NOT WRITE IN THIS AREA

(Total for Question 4 = 12 marks)

TOTAL FOR SECTION A = 40 MARKS

SECTION B

Textiles

Answer ALL questions. Write your answers in the spaces provided.

5 Figure 9 shows a design solution for a hairdresser's scissors pouch to hold two pairs of scissors, together with some additional information.

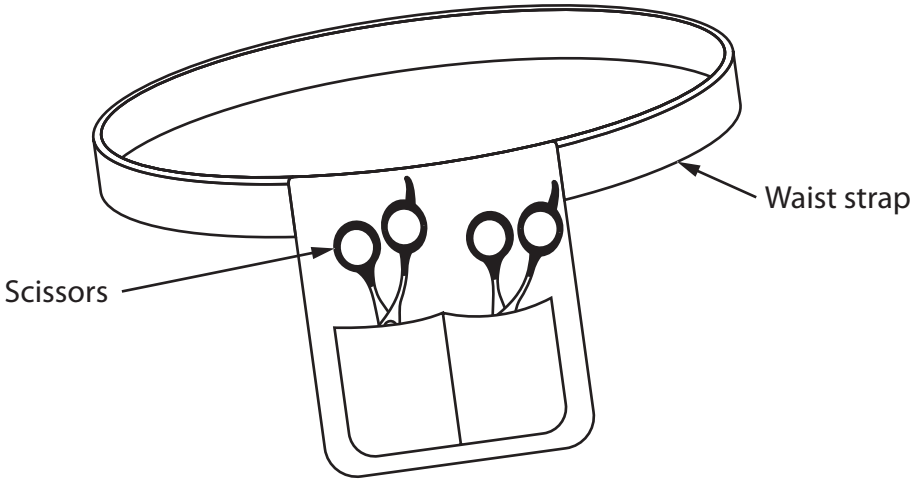

Additional information:

Average waist size of an adult:	
Men	94 cm
Women	86 cm

Figure 9

DO NOT WRITE IN THIS AREA
DO NOT WRITE IN THIS AREA
DO NOT WRITE IN THIS AREA

(a) The scissors pouch holds two pairs of scissors and needs to be improved to include the following specification points.

The scissors pouch must:

- be able to hold an additional two pairs of scissors and stop the handles of the scissors from moving as the pouch is carried around
- protect the user from potential cuts when carrying the pouch and have a surface finish that is easy to clean
- fit around a variety of waist sizes and be easily adjustable.

Use notes and sketches to show how the scissors pouch could be modified to include these three specification points.

You will be marked on how you apply your understanding of design and technology, not your graphical skills.

Use the outline of the original design solution to show your modifications.

(6)

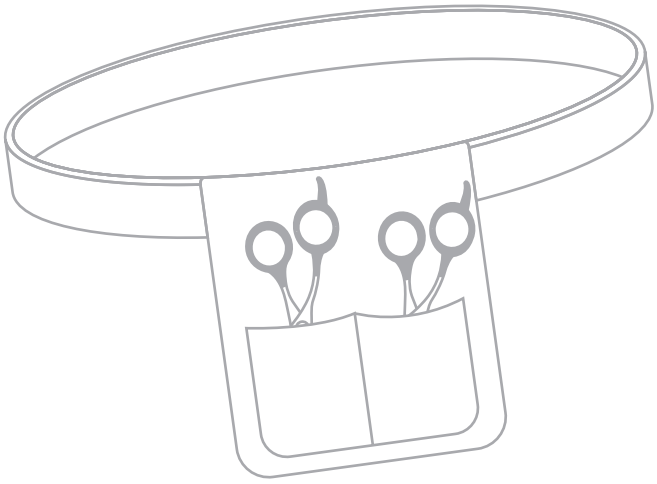

DO NOT WRITE IN THIS AREA
DO NOT WRITE IN THIS AREA
DO NOT WRITE IN THIS AREA

(b) Figure 10 shows a food play set. The toy fruits are manufactured from a felt covered polymer.

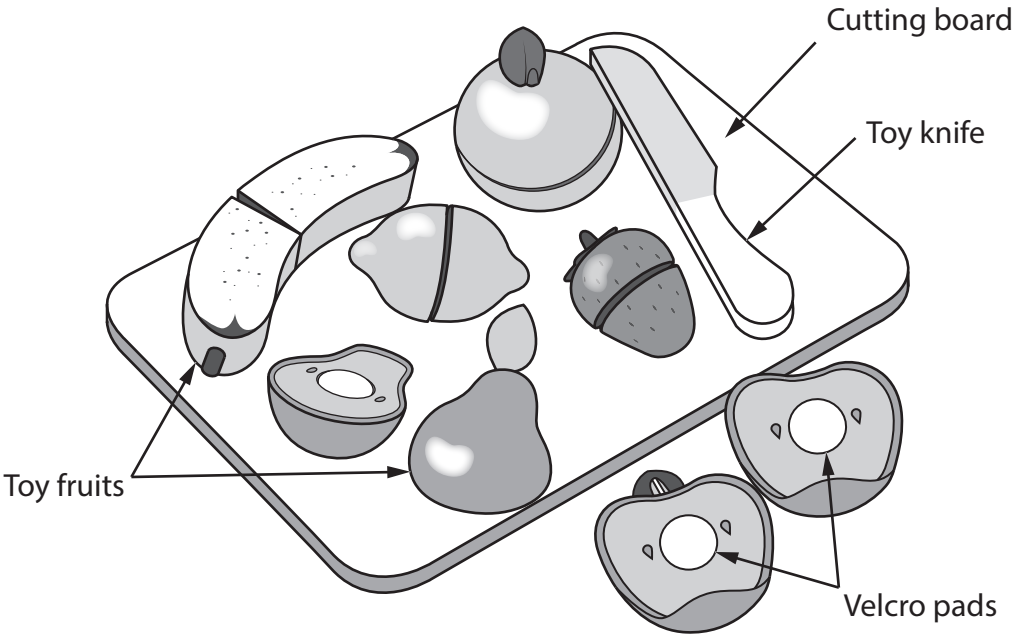

Figure 10

Explain **two** ways that the food play set meets, or fails to meet, the criterion of providing a method to educate young children about healthy eating.

(4)

1 .....

.....

.....

.....

2 .....

.....

.....

.....

(Total for Question 5 = 10 marks)

DO NOT WRITE IN THIS AREA
DO NOT WRITE IN THIS AREA
DO NOT WRITE IN THIS AREA

DO NOT WRITE IN THIS AREA
DO NOT WRITE IN THIS AREA
DO NOT WRITE IN THIS AREA

6 Figure 11 shows a denim shirt.

The shirt has been manufactured from a cotton twill fabric that has been treated using the biostoning process.

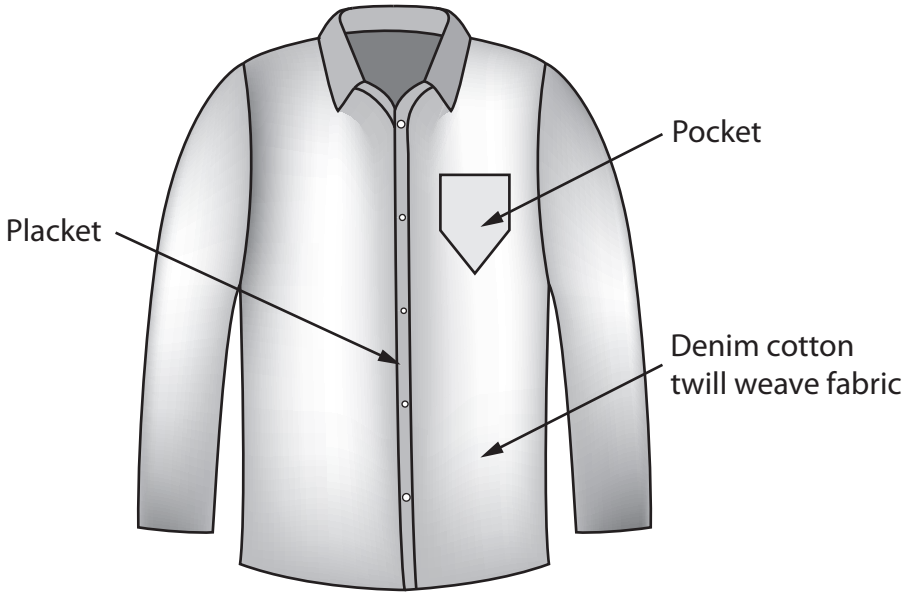

Figure 11

(a) Explain **two** reasons for treating the denim shirt using the biostoning process.

(4)

1 .....

.....

.....

.....

2 .....

.....

.....

.....

(b) Figure 12 shows a close-up drawing of the shirt placket.

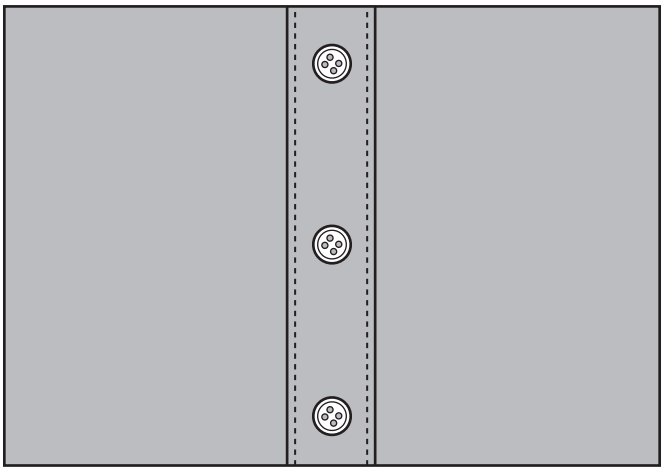

Figure 12

Use notes and sketches, in the space below, to show how the shirt placket would be stiffened with interfacing by fusing.

You will be marked on how you apply your understanding of design and technology, not your graphical skills.

(4)

DO NOT WRITE IN THIS AREA
DO NOT WRITE IN THIS AREA
DO NOT WRITE IN THIS AREA

(c) Explain **one** physical characteristic of a twill woven fabric that makes it an ideal material for the denim shirt.

(2)

.....

.....

.....

.....

DO NOT WRITE IN THIS AREA
DO NOT WRITE IN THIS AREA
DO NOT WRITE IN THIS AREA

Figure 13 shows a dimensioned drawing of the shirt pocket.

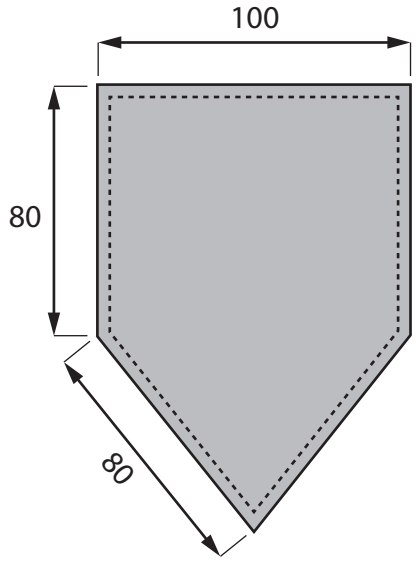

All dimensions in mm

Diagram not to scale

Figure 13

(d) Give **two** different manufacturing methods that could be used to cut out the shape of the shirt pocket from a sheet of cotton twill weave fabric.

Explain **one** reason for using each manufacturing method.

(6)

Method 1

.....

Explanation

.....

.....

.....

Method 2

.....

Explanation

.....

.....

.....

(Total for Question 6 = 16 marks)

DO NOT WRITE IN THIS AREA
DO NOT WRITE IN THIS AREA
DO NOT WRITE IN THIS AREA

7 Figure 14 shows a gardener's tunnel used to cover plants.

The gardener's tunnel has been manufactured from a non-woven bonded fabric.

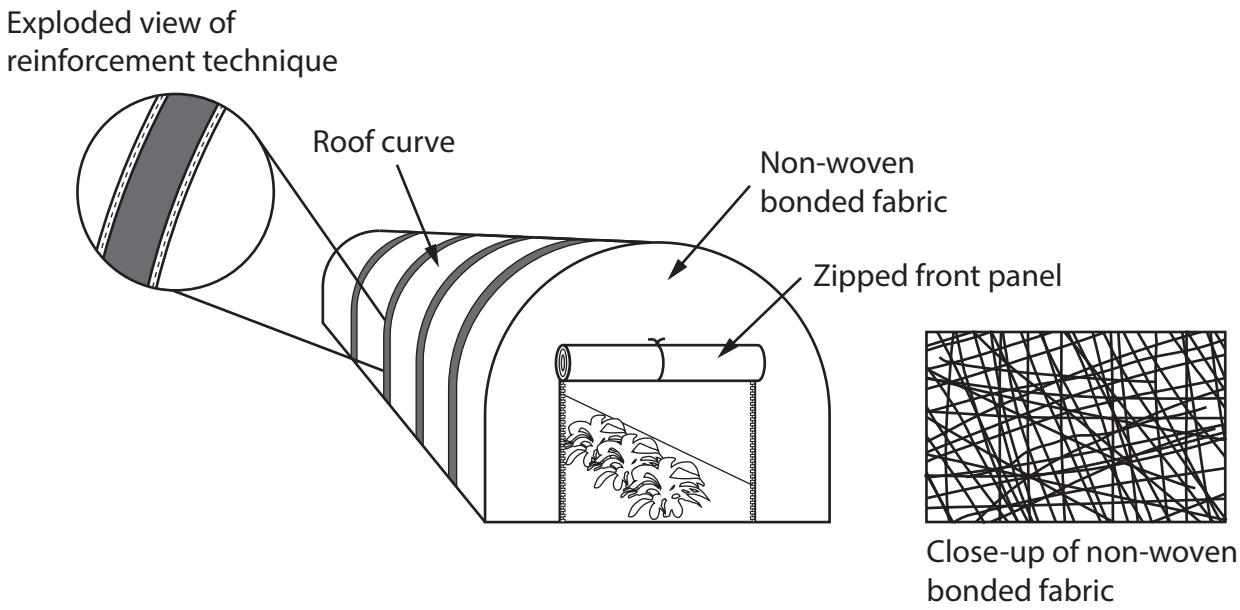

Figure 14

(a) Name a specific reinforcement technique that has been used to support the non-woven fabric to create the roof curve.

(1)

.....

DO NOT WRITE IN THIS AREA
DO NOT WRITE IN THIS AREA
DO NOT WRITE IN THIS AREA

(b) Explain **two** working properties of non-woven bonded fabric that make it an ideal material for the curved roof of the gardener's tunnel.

(4)

1 .....

.....

.....

.....

2 .....

.....

.....

.....

DO NOT WRITE IN THIS AREA
DO NOT WRITE IN THIS AREA
DO NOT WRITE IN THIS AREA

Figure 15 shows a dimensioned drawing of one of the gardener's tunnels.

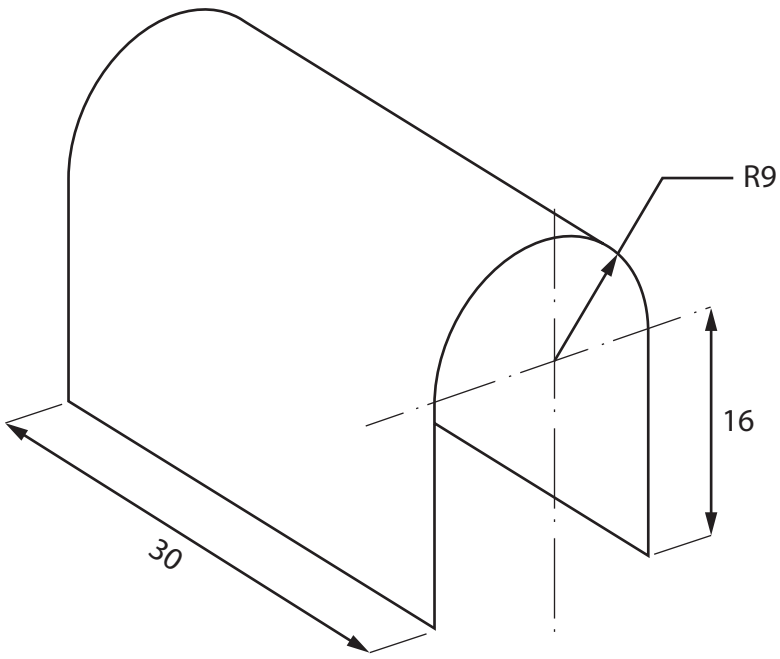

All dimensions in cm

Diagram not to scale

Figure 15

Circumference of a circle = πD

Use π = 3.142

(c) Calculate how many of the gardener's tunnels shown in Figure 15 can be cut from a large flat sheet of non-woven bonded fabric that measures 244 cm × 122 cm.

(5)

Answer .....

DO NOT WRITE IN THIS AREA
DO NOT WRITE IN THIS AREA
DO NOT WRITE IN THIS AREA

(d) Figure 16 shows the zipped front panel on the gardener's tunnel.

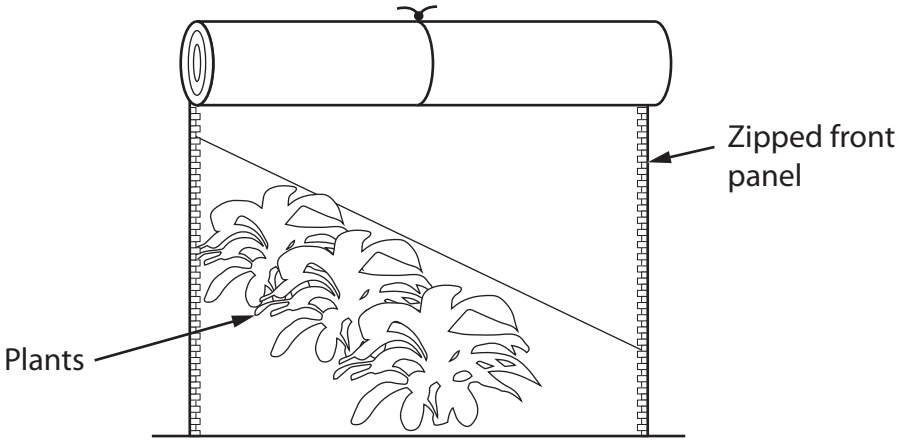

Figure 16

Explain **two** benefits of using a zip on the front panel of the gardener's tunnel.

(6)

1 .....

.....

.....

.....

.....

.....

2 .....

.....

.....

.....

.....

.....

(Total for Question 7 = 16 marks)

DO NOT WRITE IN THIS AREA
DO NOT WRITE IN THIS AREA
DO NOT WRITE IN THIS AREA

8 Figure 17 shows a school jumper manufactured from a weft knitted acrylic fabric.

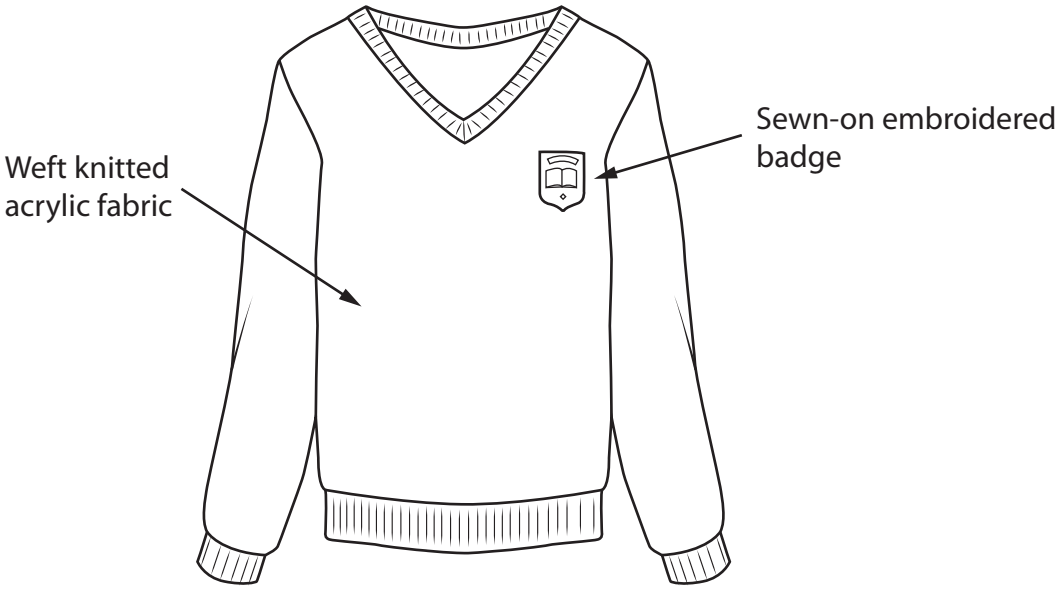

Figure 17

Manufacturing school jumpers from weft knitted acrylic fabric is cost effective.

(a) Explain **one other** benefit of manufacturing the fabric of the school jumper from acrylic fibres.

(2)

.....

.....

.....

.....

(b) Explain **one** advantage of using a regular denier acrylic yarn to form into the knitted fabric.

(3)

.....

.....

.....

.....

DO NOT WRITE IN THIS AREA
DO NOT WRITE IN THIS AREA
DO NOT WRITE IN THIS AREA

(c) Explain **two** reasons why the embroidered badge has been manufactured as a sub-assembly.

(4)

1 .....

.....

.....

.....

2 .....

.....

.....

.....

DO NOT WRITE IN THIS AREA
DO NOT WRITE IN THIS AREA
DO NOT WRITE IN THIS AREA

(d) The school jumpers are manufactured in the United Kingdom and sold around the world.

Figure 18 shows some additional information about the school jumpers.

Source of acrylic fibres	China
Country of manufacture	United Kingdom
Potential market	Schoolchildren
Scale of production	Batch

Figure 18

Analyse the information in Figure 18.

Evaluate the school jumpers with reference to cost factors including:

- quality of material
- manufacturing processes necessary
- treatments.

(9)

.....

.....

.....

.....

.....

.....

.....

.....

.....

.....

.....

.....

.....

DO NOT WRITE IN THIS AREA
DO NOT WRITE IN THIS AREA
DO NOT WRITE IN THIS AREA

(Total for Question 8 = 18 marks)

TOTAL FOR SECTION B = 60 MARKS
TOTAL FOR PAPER = 100 MARKS

DO NOT WRITE IN THIS AREA
DO NOT WRITE IN THIS AREA
DO NOT WRITE IN THIS AREA